PRODUCT OVERVIEW

SERVOTOUGH Laser 3 Plus Process

HAZARDOUS AREA

GAS	MEASURES	APPLICATION
OXYGEN	PERCENT	PROCESS CONTROL COMBUSTION SAFETY

SENSING TECHNOLOGY

TUNABLE DIODE LASER

KEY APPLICATIONS

- Oxidation control
- Inerting
- Safety monitoring
- Flare gas monitoring
- Combustion control
- Coal to chemical
- Process control
- Process oxygen

COMPACT TDL GAS ANALYZER OPTIMIZED FOR PROCESS O_2 MEASUREMENTS

UNRIVALLED PERFORMANCE

- Process temperatures up to 500°C (930°F) *
- Low detection limit
- Negligable zero drift
- Calibration 12 months
- Fast response

FLEXIBLE

- Compact design
- Performs in high particulate environments
- Path lengths from 0.1m to 5m (0.3-16.4ft) *
- Minimal cross interference
- Diverse mounting: ideal for ducts, stacks and reactor installations

EASY TO USE

- Simple to install and operate
- Robust and reliable
- Space saving
- Digital communications Modbus over Ethernet
- User friendly interface and rapid disconnect for easy calibration

LOW COST OF OWNERSHIP

- Intuitive alignment for easy installation and maintenance
- Non-depleting TDL technology
- No moving parts, no consumables
- No sample conditioning system - reduced maintenance costs
- No hazardous area purge required

BENCHMARK COMPLIANCE

- ATEX, IECEx and North American hazardous area approvals
- Certified for gases and dust
- Hardware safety integrity certification supports use in SIL 2 safety instrumented systems
- IP66
- CE approved

* Application and measurement dependent

For more information please contact us

Visit servomex.com/contact

SERVOMEX.COM

SERVOMEX
a spectris company

PRODUCT OVERVIEW

SERVOTOUGH Laser 3 Plus Process

HAZARDOUS AREA

A REVOLUTIONARY APPROACH TO TDL GAS ANALYSIS

By combining the latest advances in hardware with leading-edge software processing, the SERVOTOUGH Laser 3 Plus is a revolutionary step forward for TDL gas analysis. Servomex has approached TDL analysis afresh, creating an analyzer a fraction of the size without compromising performance. The result is TDL analysis that is easier and faster to install - saving valuable space while enabling much greater installation flexibility.

LOW MAINTENANCE, LOW COST-OF-OWNERSHIP

The next-generation ethos of the Laser 3 Plus works hard to reduce costs at all stages. In addition to the immediate advantages of TDL technology - a non-depleting measurement which requires no sample conditioning system - the Laser 3 Plus compact design greatly reduces installation time, with small, light intuitive alignment for easy installation and maintenance. Full ethernet communications for commissioning, diagnostics and trouble shooting.

HIGH PERFORMANCE MONITORING

The hardware advances of the Laser 3 Plus are matched by advanced Wave Length Signal Modulated Spectroscopy processing software which eliminates drift over extended operational periods by automatically tracking on a sealed reference cuvette absorption line - Line Lock Technology. This robust tracking mechanism ensures a highly reliable and accurate operation over long periods, with calibration frequencies extended beyond twelve months for many applications.

The result is a sturdy, general purpose and hazardous area optimized design which ensures Laser 3 Plus can handle the most challenging of locations; including particulate-rich environments.

LINE LOCK TECHNOLOGY - SAFE, SECURE, RELIABLE.

USEFUL LINKS

SERVOMEX SERVICE NETWORK
servomex.com/service

SERVOMEX SYSTEMS INTEGRATED SOLUTIONS
servomex.com/systems

SERVOMEX EXPERT UNRIVALLED KNOWLEDGE AND VISION
servomex.com/expert-guidance

PBTDSL3PProcess Rev.0 Date: 08/21

These analyzers are not intended for any form of use on humans and are not medical devices as described in the Medical Devices Directive 93/42EEC.

Please note: *Whilst every effort has been made to ensure accuracy, no responsibility can be accepted for errors and omissions. Data may change, as well as legislation, and you are strongly advised to obtain copies of the most recently issued regulations, standards and guidelines. This document is not intended to form the basis of a contract.*

SERVOMEX
a spectris company

SERVOMEX.COM

TECHNICAL DATA SHEET

SERVOTOUGH Laser 3 Plus Process

SPECIFICATIONS

GAS MEASURED	O_2
TECHNOLOGY	Single Line Tunable Diode Laser Spectroscopy
PERFORMANCE	
Optical path length ‡	0.5-5m (1.6-16.4ft)
Detection limit (LDL) *‡	0.02%
Min. range ‡	0-1%
Max. range ‡	0-100%
Max. pressure ‡	2 bar absolute (barA)
Max. temperature ‡	500°C (932°F)
Measurement update rate	5 readings per second
Response Time T_{90}	<2s #
Drift (zero)	Negligible, <2% Full Scale Range (FSR) between calibrations
Drift (span)	<4% FSR between calibrations
Linearity	<0.25% FSR
Repeatability	± detection limit or ± 1% of reading, whichever is the greater
Calibration and maintenance	Recommended every 12 months
Measurement availability	Optimal measurement availability via sealed reference cuvette and Servomex's unique line lock technology principle as standard.

* Detection limits are specified as the 95% confidence interval for 1m (3.3ft) optical path and gas temperature/pressure = to 25°C (77°F) /1 barA.
‡ Dependent on temperature path length and dust. Refer to Servomex for application specific performance and limits.
\# Min. 1 second. Refer to Servomex, LDL and noise affected

SIGNAL OUTPUTS/INPUTS	
Analog output	1 isolated 4-20mA: 500Ω maximum as standard 1 x additional output (specification as above) may be fitted as an option
Output range	Analog output parameters freely selectable over measurement range
Alarms & relays	1 x status relay 1A at 30V dc/ac as standard 2 x additional outputs (specification as above) may be fitted as an option
Analog input (optional)	2 x 4-20mA inputs, maximum current 22mA; input impedence 50Ω
Digital communications	Modbus TCP/IP Ethernet (10 or 100 base)

OPERATING ENVIRONMENT	Ensure the effects of any local thermal radiation is considered when assessing the operating environment
Operation	-20°C to +65°C (-4°F to +41°F)
Mounting flange temperature	135°C (275°F)
Storage temperature	-20°C to +65°C (-4°F to +41°F)
Relative humidity	0-80% RH, non-condensing
Altitude (maximum)	4,000m (13,120ft) 2,000m (6,560ft) for hazardous area variants
Warm-up time	Functional within 10 minutes; Servomex recommend allowing 3 hours for the analyzer to stabilize
Ingress protection	IP66, NEMA 4X

PHYSICAL	TRANSMITTER	RECEIVER
Weight	3kg (6.6lbs)	2kg (4.4lbs)
Dimensions, WxDxH	131 x 164 x 303mm (5 1/8" x 6 1/2" x 12")	110 x 146 x 248mm (4 5/16" x 5 3/4" x 9 3/4")
Mounting	Flange to DN25, DN50, ANSI 1", 2", 3" or 4"	

UTILITIES	
Supply voltage	24V dc (18-30V dc)
Rated power	25W maximum
Purge gas	Dry and oil-free air (ISO 8573.1 Class 2-3) or N_2 99.99, gas requirement and flow rate is application dependent
Zero gas	Typically nitrogen
Span gas	Application dependent

ACCESSORIES	
	Accessories such as alignment tools, calibration cell kits, purge panels and insertion tubes, isolation flanges and thermal spacers are available for specific applications - contact your local Servomex business center

SAMPLE WETTED MATERIALS

	Application configurable from
Sample wetted seals	Viton® 70 (standard) or Chemraz® 505 (solvent resist) or equivalent
Flanges	Stainless steel (typically 316)†
Insertion tubes	Stainless steel (typically 316)†
Process flange gasket	Stainless steel/graphite composite
Process windows	Fused silica (standard) or Sapphire (application dependent)
Process window seal	Loctite® 595

† Other options are available, such as titanium CP-2 or Hastelloy® C276

COMPLIANCE

HAZARDOUS AREA APPROVALS	For process hazardous area zones no greater than Zone 2 or Zone 21
ATEX (Europe)	Ex II 3G Ex ic ec nC op is IIC T4 Gc (-20°C ≤ Ta ≤ +65°C) Ex II 2D Ex tb [Ex op is] IIIB T135°C IP66 Db (-20°C ≤ Ta ≤ +65°C)
IECEx (International)	Ex ic ec nC op is IIC T4 Gc (-20°C ≤ Ta ≤ +65°C) Ex tb [Ex op is] IIIB T135°C IP66 Db (-20°C ≤ Ta ≤ +65°C)
North America	Class I, Division 2, Groups A-D Class II, Division 2, Groups F&G Class III Class I, Zone 2 Group IIC Ambient temperature range -20°C to +65°C, T4 IP66 and type 4X
EC DIRECTIVES	The SERVOTOUGH Laser 3 Plus complies with the EMC Directive, RoHS II, and all other applicable directives
ELECTRICAL SAFETY	Electrical safety to IEC 61010-1; the SERVOTOUGH Laser 3 Plus has also been certified for use in ordinary locations in USA and Canada

SERVOMEX

CONFIGURATION

ANALYZER FEATURES	The SERVOTOUGH Laser 3 Plus measurement arrangement is configured to suit a specific application (see the supplementary configuration sheet), the following features may be configured independently
Outputs and alarm options	Standard: 1 x 4–20mA output and 1 x status relay Additional option card: 1 x 4–20mA output, 2 x status relays, 2 x 4–20mA inputs
Certification (select one)	Safe area/general purpose Gas: ATEX Cat 3 / IEC Ex zone 2 Dust: ATEX Cat 21 / IEC Ex zone 21 North American Class 1 Division 2 (gas and dust)
Functional safety manual	Demonstrates analyzer hardware compliance to SIL 2, IEC 61508

DIMENSIONAL DRAWINGS

TRANSMITTER

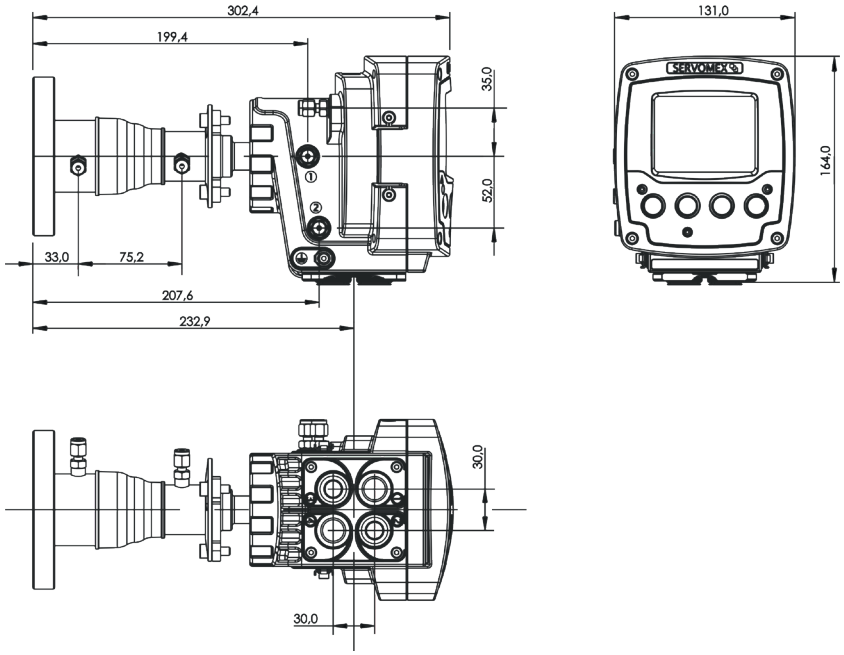

RECEIVER

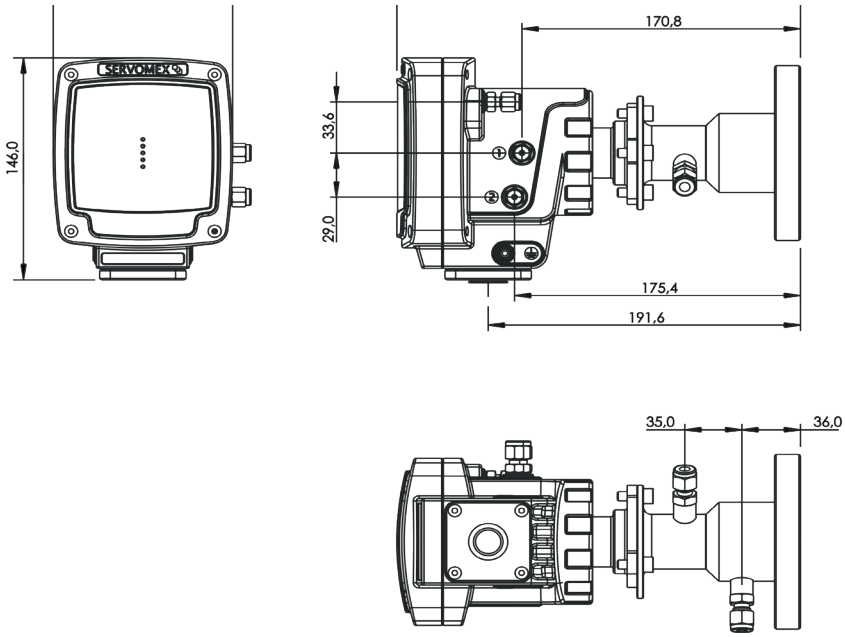

Dimensions shown in millimetres

WE'RE READY TO HELP

WHATEVER YOUR GAS ANALYSIS REQUIREMENTS, WHEREVER YOU ARE

PBTDSL3PProcess Rev.0 Date: 08/21

These analyzers are not intended for any form of use on humans and are not medical devices as described in the Medical Devices Directive 93/42EEC.

Please note: *Whilst every effort has been made to ensure accuracy, no responsibility can be accepted for errors and omissions.*
Data may change, as well as legislation, and you are strongly advised to obtain copies of the most recently issued regulations, standards and guidelines.
This document is not intended to form the basis of a contract.

SERVOMEX
a spectris company

SERVOMEX.COM